WIPCOOL®
TWÓJ KLUCZ DO KOMFORTU

OPERATING MANUAL · ENGLISH

C110T

Pressure Washer

Read this manual before use. Keep it with the unit for its entire service life.



Read the manual
Safety and connection rules before the first start-up.

Service and warranty
Service requests and warranty terms at wipcool.eu.

Documents online
Manual, data sheet and declaration of conformity at wipcool.eu.

CONTENTS

How to use this manual

Find the chapter you need. The numbers on the right are the pages of this booklet.

01	Wipcool C110T user manual	3
02	General information	3
03	Symbols and conventions	3
04	Safety information	5
05	Technical specifications	6
06	Device diagram	7
07	Package contents	9
08	Transport and storage	9
09	Application	10
10	Connection	10
11	Operation	14
12	Maintenance	15
13	Troubleshooting	17
14	Waste electrical and electronic equipment	18
15	Service and documents	19

MEANING OF SYMBOLS



Separate collection of WEEE

Do not dispose of used equipment with household waste.



CE marking

Manufacturer's declaration of conformity with EU requirements.



Read the manual

Safety and operating rules before starting work.

Wipcool C110T user manual

The Wipcool C110T pressure washer is designed for cleaning work in the air conditioning and refrigeration industry and for industrial applications. It can draw water from a mains supply or an external tank.

The user manual is an integral part of the product. Please read this manual carefully and follow all instructions strictly.

General information

Wipcool products are designed for professional use by qualified air conditioning and refrigeration engineers. As the manufacturer, Wipcool stipulates that our equipment should only be operated by suitably qualified and trained personnel.

- Follow all local safety regulations and general safety standards when using the Wipcool C110T pressure washer.
- Keep the user manual near the device so that personnel can access it easily at any time.
- Before use, qualified personnel should read the user manual carefully and understand all the instructions it contains.
- The manufacturer accepts no liability for any damage resulting from improper use, failure to follow the user manual, lack of personnel qualifications or any unauthorised modifications to the device.
- The general terms and conditions of sale contained in the sales documents apply.

Symbols and conventions

Symbols and markings used on the device and in the manual:

01



Indicates that the product meets the health, safety and environmental standards applicable in the European Union.

02



Do not dispose of the pressure washer with household waste.

03



Warning - read the text in the box next to the symbol.

04



Dangerous voltage - risk of electric shock.

05



Warning of fire or explosion in the presence of flammable materials.

06



Notice - risk of damage to the device or an incorrect result.

07



Wear eye protection.

08



Wear protective gloves.

Safety information

WARNING
Disconnect the air conditioner from the power supply before cleaning it.

Before starting work

- The electrical connection must comply with local electrical regulations.
- Check the device, hoses and connections before each use. Do not use the pressure washer if it is damaged or malfunctioning.
- Work in a well-ventilated area. Keep children and bystanders away from the work area.
- Do not use the pressure washer when tired or under the influence of alcohol, drugs or medication that impairs your ability to work.
- Do not overreach or stand on an unstable surface. Keep proper footing and balance.

WARNING
Wear rubber gloves, rubber footwear and safety glasses or a face shield.

WARNING
Do not point the spray gun at people, particularly at their eyes or mouth. Replace a damaged hose immediately - it may burst and cause serious injury.

WARNING
Do not fill the pressure washer with petrol or other flammable liquids. Do not use it in an explosive atmosphere or in the presence of flammable liquids, gases or dust.

WARNING
Do not use acids or products containing sodium or potassium hydroxide. Do not mix chemicals - they may damage the pressure washer and cause life-threatening reactions.

WARNING
Do not spray the pressure washer with water or chemicals or immerse it in water. Switch off the pressure washer and disconnect it from the power supply before connecting, maintaining or servicing it.

Protecting the device

CAUTION
Do not add detergent to the water. This may corrode the pump head and the systems connected to it.

CAUTION

Do not use the pressure washer without the inlet filter. Debris may block the pump, reduce pressure or stop the water flow.

- Switch off the pressure washer when the tank is empty. Running the pump dry may damage it.
- Use only approved accessories and spare parts. The spray gun and nozzles must be original and compatible with this model.
- Do not remove the covers or dismantle the device. Do not repair it yourself.

Technical specifications

Parameter	Value
Model	C110T
Power supply	230 V~ / 50–60 Hz
Power	2.5 kW
Protection class	I
Operating pressure	90 bar
Pressure adjustment range	10–90 bar
Maximum pressure	110 bar
Water inlet pressure	3 bar
Flow rate	9 l/min
Inlet hose	2 m
High-pressure hose	10 m
Ambient operating temperature	5–40 °C
Storage temperature	5–40 °C
Device weight	26 kg
Dimensions (L × W × H)	460 × 280 × 290 mm

Device diagram



Figure 1. From top: power switch, overcurrent protection.



Figure 2. From top: oil filler, oil level sight glass, oil drain.

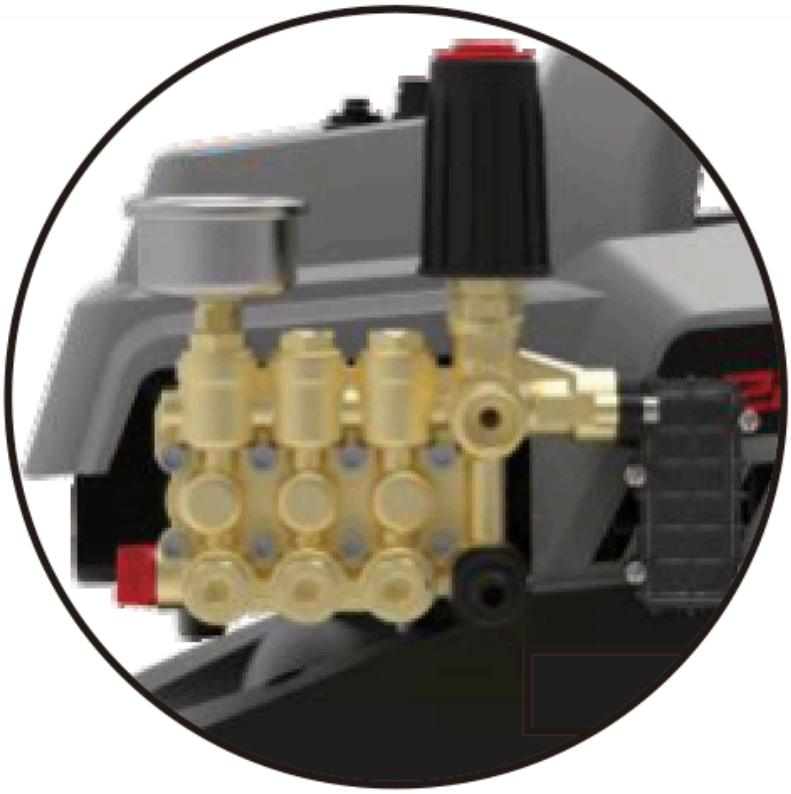

Figure 3. Water inlet - connection on the side of the pump head.

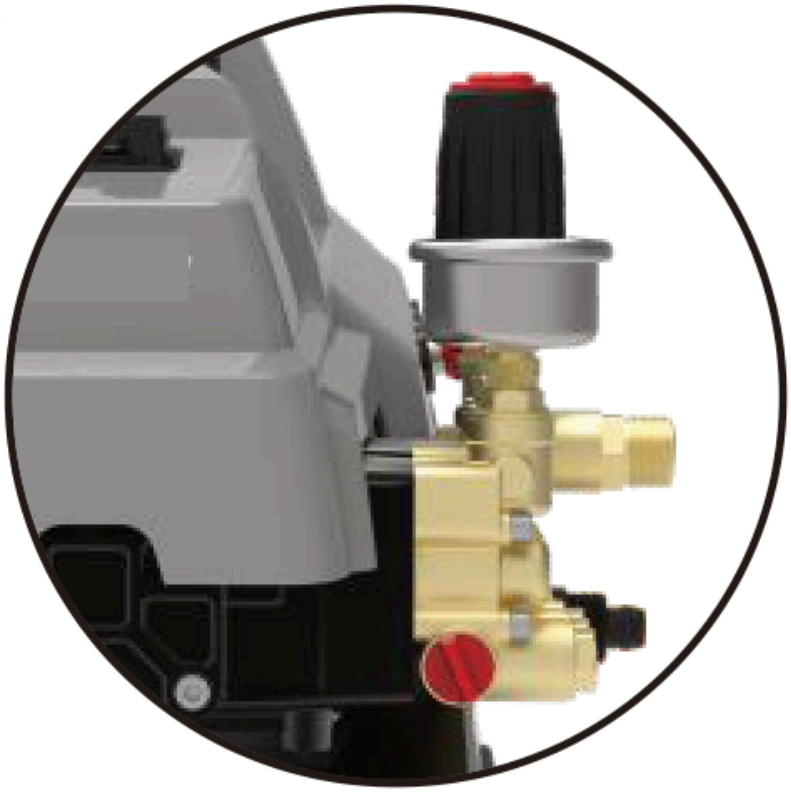

Figure 4. From top: pressure adjustment knob, pressure gauge, water outlet.

Package contents

- C110T pressure washer.
- Spray gun and lance.
- 0°, 15° and 25° nozzles.
- Inlet filter.
- 2 m inlet hose.
- 10 m high-pressure hose.
- User manual.

After unpacking, check that the package is complete and in good condition. Report any missing items or transport damage to the seller.

Transport and storage

Protect the pressure washer from frost. Water freezing in the pump may damage the pump head and motor.

- Before moving the pressure washer, switch it off, disconnect the power supply and press the spray gun trigger to release the pressure in the hose.
- Do not throw the pressure washer during transport; protect it from shocks and excessive vibration.
- Protect the device from moisture, dust and extreme temperatures during transport.
- Drain the water from the system before storage. Store the pressure washer horizontally in a dry, well-ventilated place at 5–40 °C, away from direct sunlight and heat sources.
- Do not place objects on the device. Do not crush the power cable or kink the high-pressure hose.

Application

The pressure washer is used to clean technical installations, machinery, equipment and work surfaces in the air conditioning and refrigeration industry and in industrial applications.

Connection

Preparation

01 Check the condition of the power cable and inlet filter and make sure that the screws and nuts on the device are not loose.

02 Connect the high-pressure hose to the water outlet on the pressure washer and the other end to the spray gun.

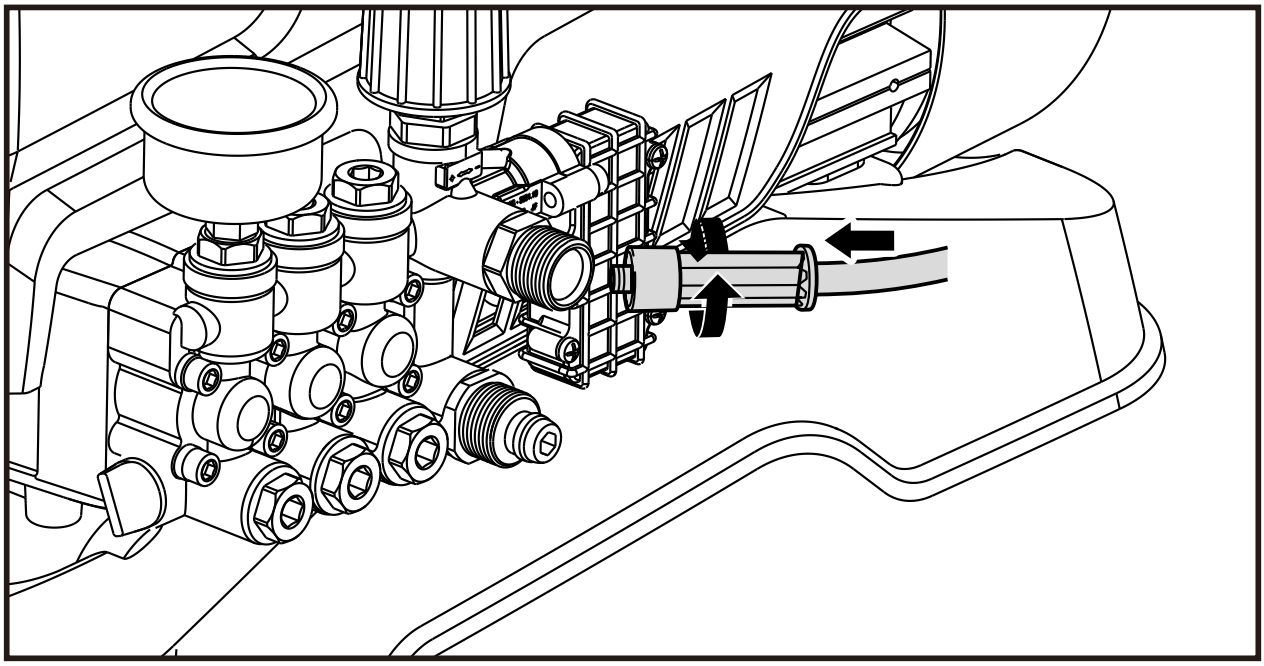

Figure 5. Connecting the hose to the water outlet.

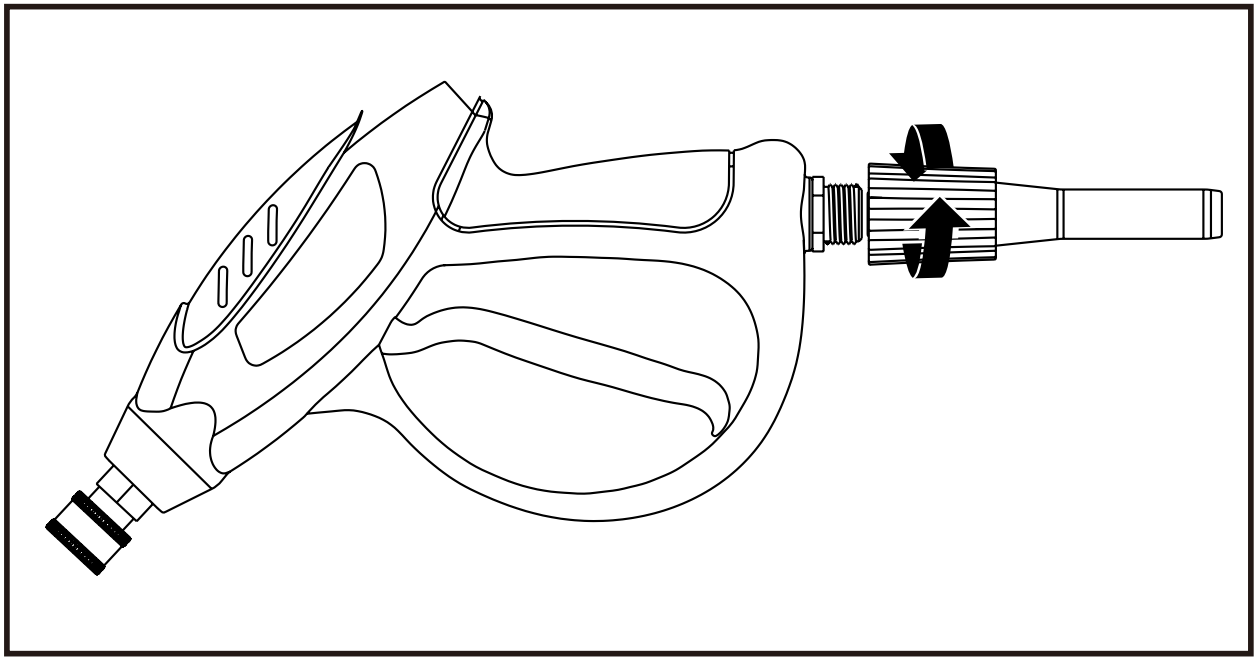

Figure 6. Connecting the hose to the spray gun.

Water supply

01 Connect the inlet hose to the water inlet on the pressure washer. A rubber seal must be fitted in the connection.

02 Connect the other end of the hose to a tap, or fit the inlet filter to it and immerse it in a water tank. The water level in the tank must not be lower than the pressure washer.

03 Check the connections for leaks. If using a tap, turn on the water supply.

Bleeding air

01 Leave the spray gun without a nozzle and set the pressure to its lowest level using the pressure adjustment knob.

02 Connect the power supply and press the spray gun trigger, then turn on the pressure washer using the power switch.

03 Hold the trigger until the water flows in a steady stream. If drawing water from a tank, continue bleeding air for 1 min after water begins to flow.

04 Switch off the pressure washer, disconnect the power supply and press the spray gun trigger to release the pressure in the hose.

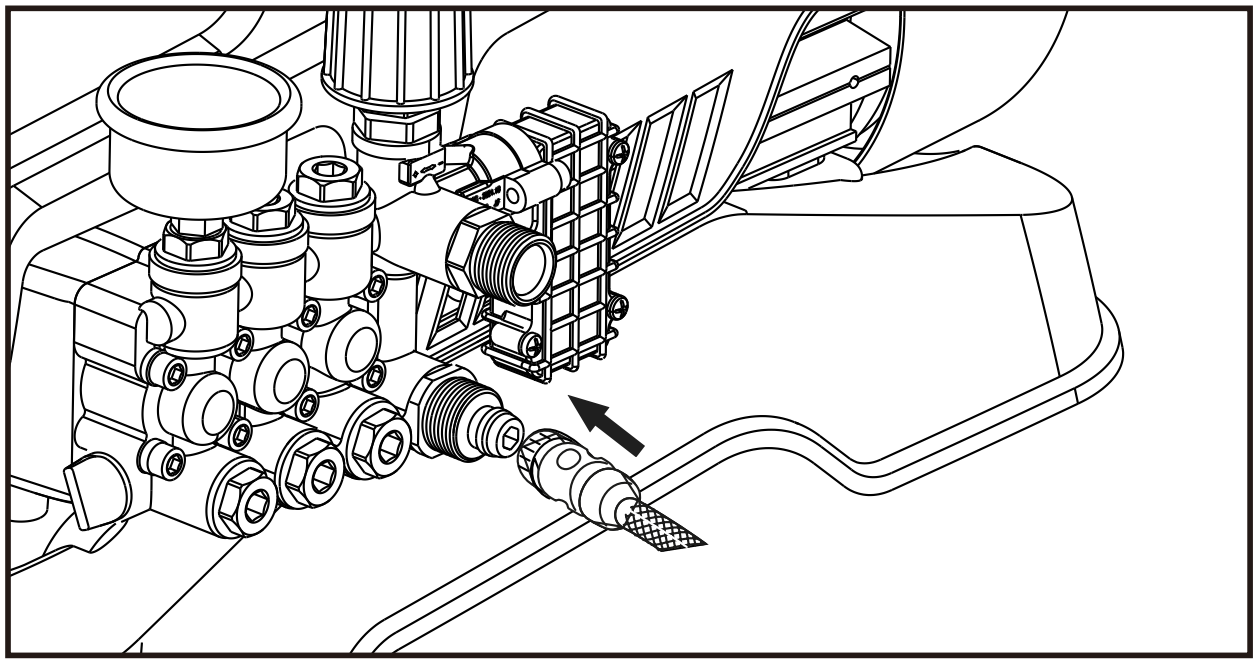

Figure 7. Connecting the inlet hose.

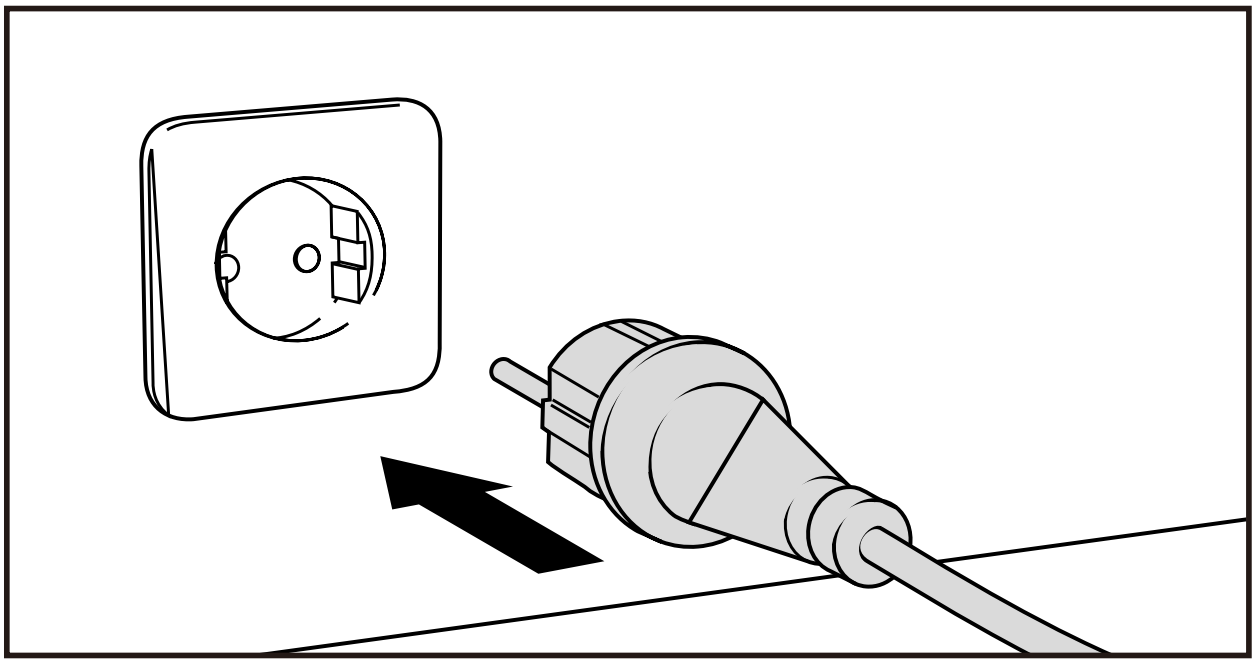

Figure 8. Connecting the power supply.

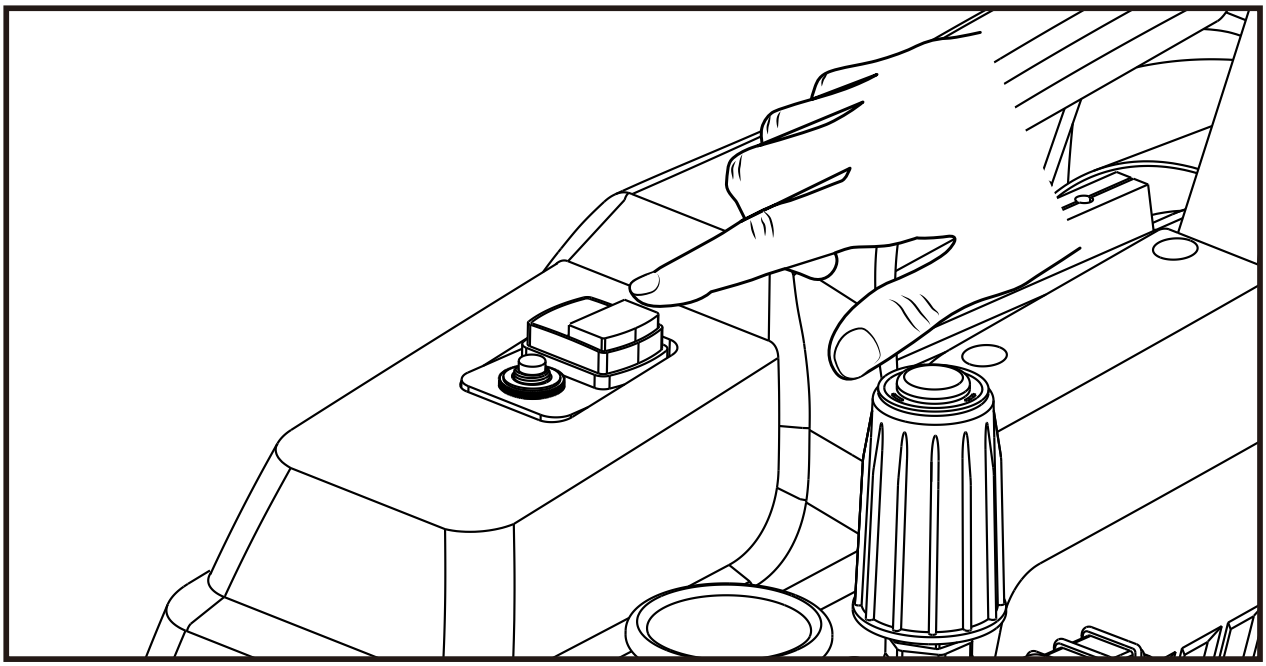

Figure 9. Switching on the pressure washer.

Operation

WARNING

Before fitting or changing the nozzle, switch off the pressure washer, disconnect the power supply and press the spray gun trigger to release the pressure in the hose.

CAUTION

When the trigger is released, the bypass valve opens automatically and the pump circulates water internally. The water temperature in the pump rises - do not leave the pressure washer in this state for more than 3 min.

01 After bleeding the air and stopping the pressure washer, fit the lance and the selected 0°, 15° or 25° nozzle. Use a concentrated jet for heavier soiling and a wider jet for larger surfaces.

02 Connect the power supply and press the spray gun trigger, then turn on the pressure washer using the power switch. Select the pressure to suit the soiling and the surface being cleaned; adjust it using the knob while watching the pressure gauge.

03 During cleaning, hold the nozzle within 10 cm of the surface being cleaned. The force of the jet decreases as the distance increases.

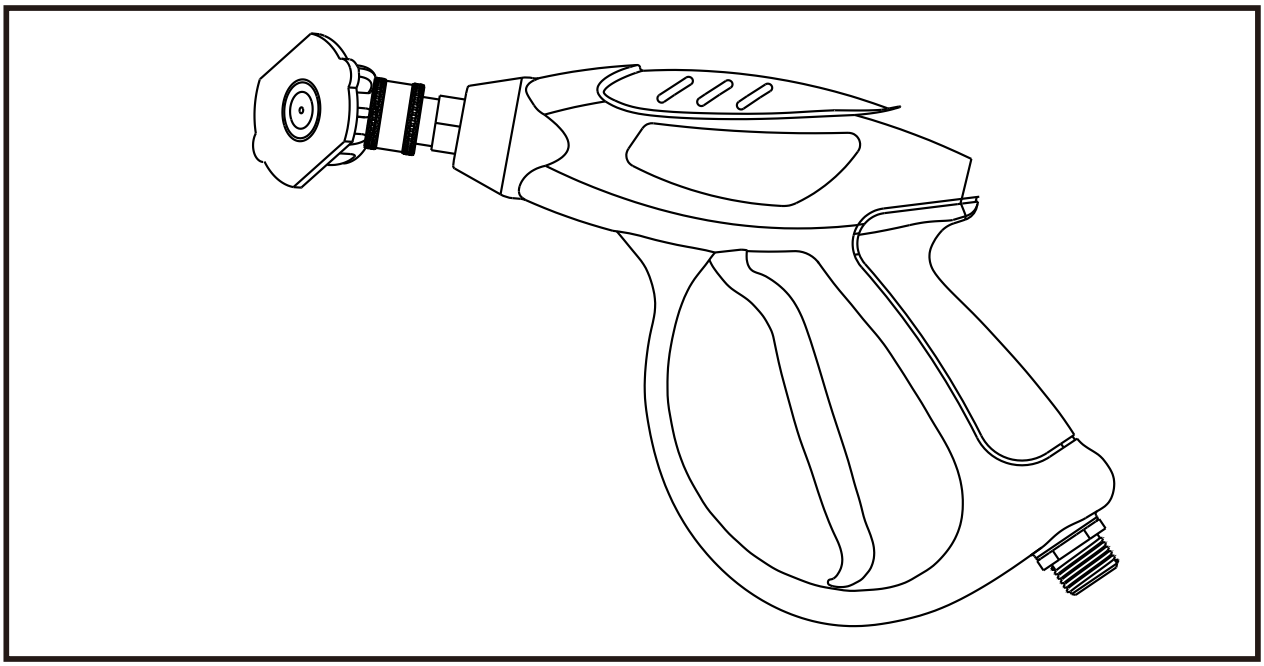

Figure 10. Fitting the nozzle.

Water droplets from the drain hole in the pump body during operation are normal.

Finishing work

Switch off the pressure washer, disconnect the power supply and press the spray gun trigger to release the pressure in the hose. Drain the water from the pump before putting it away.

Maintenance

Perform maintenance only if you have the appropriate training and tools.

Cleaning after use

- Clean the housing with a soft brush or cloth. Do not use water, alcohol, petrol, solvents, corrosive substances, strong detergents or polishes to clean the housing. Do not allow chemicals to enter the pressure washer.
- Remove debris, particularly from the ventilation slots. Regularly remove debris from the inlet filter mesh.
- Check that the nozzles are clear and inspect the condition of the spray gun.

Draining the pump

> **CAUTION**
> When draining the pump, do not run the motor for more than a few seconds. Running it dry for longer may damage the pump.

01 With the pressure washer switched off, the power supply disconnected and the pressure released, turn off the tap if using one and disconnect the inlet hose from the pressure washer.

02 Connect the power supply and run the motor using the power switch for a few seconds without a water supply.

03 Switch off the pressure washer, disconnect the power supply and press the spray gun trigger to remove the remaining water.

Checking and changing the oil

Check the oil level before each use. The oil should reach halfway up the oil level sight glass. Change the oil for the first time after 20 h of operation of the new pressure washer, and every 200 h thereafter.

01 With the pressure washer switched off and disconnected from the power supply, unscrew the oil filler cap and drain plug and drain the used oil.

02 Flush the oil chamber several times with clean paraffin, pouring it in through the oil filler and draining it through the oil drain. After emptying the chamber, tighten the drain plug.

03 Fill the oil chamber through the oil filler with 15W-40 engine oil of API CD grade and tighten the oil filler cap.

After maintenance

01 Refit any accessories removed, check the connections for leaks and inspect the condition of the cables and hoses.

02 Connect the pressure washer to the water and power supplies as described in the ‘Connection’ section and carry out a brief operating test.

Troubleshooting

Problem	Possible cause	Solution
Pressure washer does not start	No power supply	Check the power supply.
Pressure washer does not start	Incorrect supply voltage	Check that the supply voltage is within ±5% of the rated voltage.
Pressure washer does not start	Ambient temperature too low	Move the pressure washer to a warmer place (5–40 °C).
Low pressure or no water being pumped	Air in the water line	Switch off the pressure washer, disconnect the power supply and press the spray gun trigger to release the pressure in the hose. Disconnect the lance, then, with the water supply connected, connect the power supply, press the trigger and run the pressure washer for a few seconds to remove the air.
Low pressure or no water being pumped	Blocked water inlet	Clean the inlet filter.
Low pressure or no water being pumped	Debris inside the system	Have the device repaired by a service centre - submit a service request at wipcool.pl/serwis.
Water leaks	Loose connection	Check and tighten the connection.
Water leaks	Damaged rubber seal	Replace the rubber seal.
Noisy operation	Air being drawn in	Check the water level and inlet hose.
Noisy operation	Damage to internal parts	Switch off the pressure washer. Have it repaired by a service centre - submit a service request at wipcool.pl/serwis.

If the motor hums but does not turn after a long period of inactivity, switch off the pressure washer immediately. Have it repaired by a service centre - submit a service request at wipcool.pl/serwis.

Waste electrical and electronic equipment

01



The crossed-out bin symbol means that the discarded device must not be disposed of with other waste.

Under the applicable regulations on waste electrical and electronic equipment, products marked with the separate collection symbol must not be disposed of with other municipal waste. Because they contain harmful substances, electronic products that are not sorted separately may be hazardous to the environment and human health. Proper separate collection of waste electrical and electronic equipment prevents adverse effects on the environment.

By taking discarded equipment to a collection point, the user contributes to its reuse, recycling and recovery.

Recycling - a method of protecting the environment. The process of recovering substances from waste that can be reused as raw materials.

Recovery - the use of waste that has lost its useful value, such as plastics, paper and cardboard, as secondary raw materials (also commonly understood to mean destruction).

Information on the collection system for waste electrical and electronic equipment

- Waste electrical and electronic equipment must not be disposed of with other waste.
- The collection of incomplete electrical and electronic equipment and parts from discarded equipment is prohibited.
- A distributor supplying equipment intended for households to a purchaser must collect waste household equipment free of charge at the place of delivery, provided that the discarded equipment is of the same type and performs the same function as the equipment supplied.
- The user may hand over discarded equipment to a waste equipment collector, a treatment facility or a municipal waste collector in the municipality.
- Information on collection points is available on the Public Information Bulletin (BIP) websites of regional, city and municipal offices.

Service and documents

Before submitting a request, have the following ready:

- Model - shown on the device nameplate and on the invoice.
- Serial number - if there is none, provide the production number (e.g. 11/2025), usually found on the underside of the device.
- Proof of purchase - an invoice or receipt from an authorised distributor.
- Description of the fault - what is happening, when it started and under what conditions.

You can submit a service request at wipcool.pl/serwis. The warranty terms are also available there.

WIPCOOL®
TWÓJ KLUCZ DO KOMFORTU

SERVICE AND DOCUMENTS

C110T · Operating manual

EDITION DETAILS

Model	**C110T**
Edition	**05.11.2026 · EN**
Manufacturer	**Zhejiang Wipcool Refrigeration Equipment Co., Ltd.**
Authorised representative	**4REF sp. z o.o., ul. gen. Władysława Andersa 38, 15-113 Białystok**

wipcool.eu

- online manual and other languages
- data sheet and declaration of conformity
- service and requests

CE

The CE marking confirms the declared conformity with EU requirements.
Crossed-out bin: do not dispose of used equipment with household waste.