WIPCOOL®

TWÓJ KLUCZ DO KOMFORTU

OPERATING MANUAL · ENGLISH

CT370

Heat exchanger tube cleaner

Read this manual before use. Keep it with the unit for its entire service life.



Read the manual
Safety and connection rules before the first start-up.

Service and warranty
Service requests and warranty terms at wipcool.eu.

Documents online
Manual, data sheet and declaration of conformity at wipcool.eu.

CONTENTS

How to use this manual

Find the chapter you need. The numbers on the right are the pages of this booklet.

01	Wipcool CT370 user manual	3
02	General information	3
03	Symbols and conventions	3
04	Safety information	4
05	Technical specifications	6
06	Device diagram	7
07	Package contents	8
08	Transport and storage	9
09	Application	9
10	Connection	10
11	How to use	11
12	Maintenance	12
13	Troubleshooting	12
14	Waste electrical and electronic equipment	14
15	Service and documents	15

MEANING OF SYMBOLS



Separate collection of WEEE

Do not dispose of used equipment with household waste.



CE marking

Manufacturer's declaration of conformity with EU requirements.



Read the manual

Safety and operating rules before starting work.

Wipcool CT370 user manual

The Wipcool CT370 is used for mechanical cleaning of heat exchanger tubes in refrigeration and air conditioning systems. A flexible shaft with a brush removes deposits from inside the tubes.

The user manual is an integral part of the product. Please read this manual carefully and follow all instructions strictly.

General information

Wipcool products are designed for professional use by qualified air conditioning and refrigeration engineers. As the manufacturer, Wipcool stipulates that our equipment should be operated only by suitably qualified and trained persons.

- Observe all local safety regulations and general safety standards when using the Wipcool CT370 heat exchanger tube cleaner.
- The user manual should be kept near the device so that personnel can access it easily at all times.
- Before use, qualified personnel should read the user manual carefully and understand all the instructions it contains.
- The manufacturer accepts no liability for any damage resulting from improper use, failure to follow the user manual, lack of personnel qualifications or any unauthorised modifications to the device.
- The general terms of sale contained in the sales documents apply.

Symbols and conventions

Signs and markings used on the device and in the manual:

01



Warning - read the text in the box next to the symbol.

02



Dangerous voltage - risk of electric shock.

03



Warning of flammable materials.

04



Before starting work, read all safety and installation instructions carefully.

05

CE

Indicates that the product meets the health, safety and environmental standards applicable in the European Union.

06 **RoHS** The product meets the requirements for restricting the use of hazardous substances.

07



Do not dispose of the device with household waste.

Safety information

Work area and operator

- Keep the work area clean and well lit. Keep children, bystanders and animals away from the work area.
- Do not work when tired or under the influence of alcohol, drugs or medication that impairs your ability to work.
- Maintain firm footing and balance, especially on uneven ground; do not overreach.
- Wear safety glasses. Select other protective equipment according to the hazards in the work area.
- Do not leave the device running unattended. Disconnect the power supply before leaving the work area.

WARNING
Do not use the device in an explosive atmosphere or in the presence of flammable liquids, gases or dust. Do not use flammable or explosive liquids such as petrol, heating oil or paraffin.

Moving parts

WARNING
Keep hair, clothing and gloves away from moving parts. Do not wear loose clothing or jewellery; secure long hair. Keep clear of the rotating shaft and do not point it at people or animals.

- Use only accessories recommended for the CT370.
- Before each use, check the condition and attachment of the shaft, brushes and cables, and check the connections for leaks. Check that moving parts are not jammed, damaged or misaligned.
- Do not operate the device if it is incomplete or damaged. If the foot switch does not start or stop the drive, stop using the device.

WARNING
Disconnect the plug from the power supply and shut off the water supply before adjustment, changing accessories, maintenance, checking faults or disconnecting the inlet hose or shaft.

Electrical supply

WARNING
Connect the device to a properly earthed socket that meets the device requirements and local electrical regulations. Do not remove the protective earth conductor, modify the plug or use any plug adapters. If you have any doubt about the earthing, have the installation checked by a qualified electrician.

- Use only undamaged three-core extension leads with a protective earth conductor, rated for outdoor use. Select the conductor cross-section according to the length and load; an undersized cross-section causes voltage drop, loss of power and overheating.
- Check the cable, plug and extension lead before use. Replace a damaged cable immediately.
- Disconnect the power supply by gripping the plug. Do not pull the cable or carry the device by it. Do not run the device over the cable.
- Protect the cable from oil, sharp edges, hot surfaces and moving parts. Avoid body contact with earthed surfaces while the device is operating.
- Do not expose the device to rain. Place it in a dry location, protected from water flowing out of the tubes being cleaned. Do not spray the housing with pressurised water.

Water and operating conditions

- Use clean water in the device. Do not use the device without the inlet filter. Contamination can block the pump, reduce pressure or stop the water flow.
- Do not use the device to clean objects at temperatures above 79 °C.
- If the device does not work correctly, has been damaged or flooded, stop using it. Do not repair the device yourself. Have it repaired by the service centre - submit a service request at wipcool.pl/serwis. Only replacement parts identical to the original parts must be used for repairs.

Technical specifications

Parameter	Value
Model	CT370
Power supply	230 V~ / 50–60 Hz
Input power	370 W
Shaft speed	860 rpm
Shaft length	7.6 m
Shaft diameter	12 mm
Power cable length	4 m
Inlet hose length	2 m
Brushes	1/2"–1"; 18 pieces (2 sets)
Protection class	I
Device weight	24 kg
Device dimensions (L × W × H)	465 × 275 × 528 mm
Operating temperature	5–40 °C
Storage temperature	5–40 °C

Device diagram



Figure 1. Device components - items 1–10.

No.	Name
1	Brush storage compartment
2	Flexible shaft
3	Fan
4	Foot switch
5	Power switch
6	Power cable
7	Fuse
8	Manual shaft switch
9	Foot switch connection
10	Water inlet

The shaft core is its inner rotating part, surrounded by a sheath. The drive coupling and self-priming pump are internal parts of the device.

Device dimensions

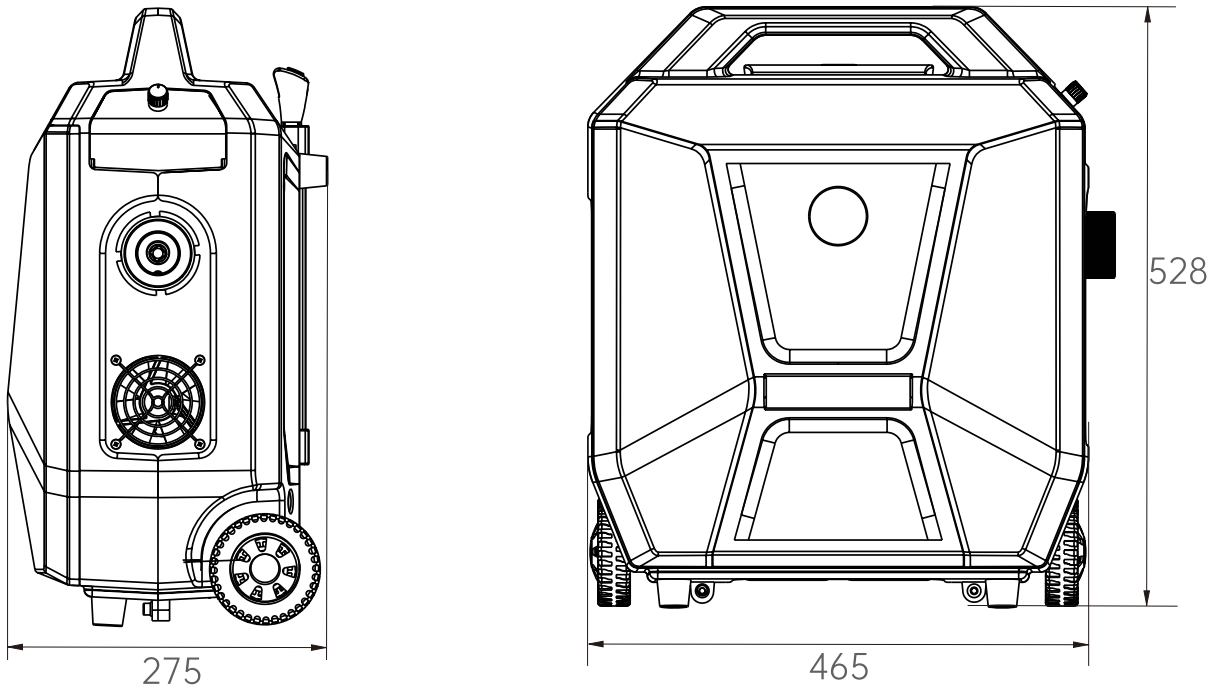

Figure 2. Device dimensions in mm.

Package contents

- CT370 device with 4 m power cable.
- 12 mm flexible shaft, 7.6 m long.
- Two sets of brushes - 18 pieces in total.
- Foot switch.
- 2 m inlet hose with inlet filter.
- Brass connector and plastic connector.
- Accessory bag.
- User manual.

After unpacking, check that the package is complete and in good condition. Report any missing items or transport damage to the seller.

Brush sizes

Inch size	Manufacturer's metric size [mm]
1/2"	12.7

Inch size	Manufacturer's metric size [mm]
9/16"	14.3
5/8"	15.9
11/16"	17.5
3/4"	19.1
13/16"	20.6
7/8"	22.1
15/16"	23.8
1"	25.4

Transport and storage

Transport

- Transport the device in its original packaging. Do not throw it; protect it from impacts, excessive vibration, moisture, dust and extreme temperatures.
- Secure the device against tipping over and movement during transport.

Storage

Protect the device from frost. Water frozen in the pump can damage the pump head and motor.

- Store the device horizontally in a dry, well-ventilated room at 5–40 °C, away from direct sunlight and heat sources.
- Do not enclose a wet shaft in the bag or bend it tightly.
- Store the device out of the reach of children and untrained persons.

Application

The device removes scale and deposits from condenser and evaporator tubes in chillers. A dirty condenser may not achieve full cooling capacity or may operate at a higher pressure.

Water can be supplied from a tap or drawn from a tank.

Connection

01 Disconnect the plug from the power supply. Keep the tap water supply shut off until all connections are complete.

02 Connect the foot switch to the connection (item 9).

03 Connect the inlet hose to the water inlet (item 10). Place the other end in a tank of clean water or connect it to a tap. Make sure the water supply is unobstructed and the inlet filter is clean.

04 Fit the flexible shaft into the device's quick-release coupling. Check that the core is seated and the shaft is securely attached.

05 Select a brush to match the diameter of the tube being cleaned and attach it to the end of the shaft.



Figure 3. CT370 connection panel: water inlet at the bottom left, foot switch connection at the bottom right.



Figure 4. Drawing water from a tank.

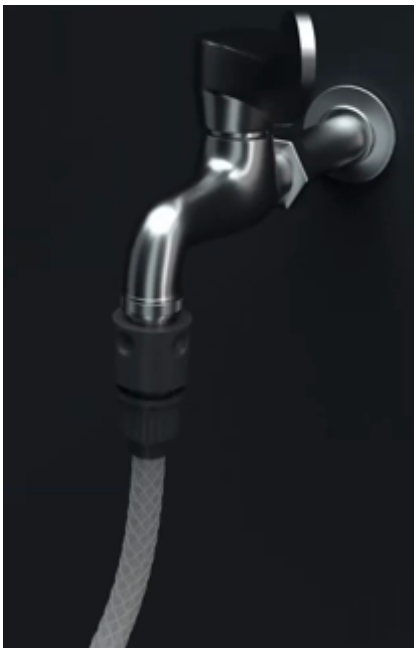

Figure 5. Connecting the hose to a tap.

How to use

WARNING

Do not run the shaft loose outside a tube.

01 Place the device on a stable surface and position the shaft so that it cannot catch on anything. Insert the attached brush into the tube to be cleaned.

02 If supplying water from a tap, turn on the water supply.

03 Connect the device to the power supply and turn it on using the power switch. Use the foot switch to start and stop the drive; check that the shaft rotates correctly.

04 Slowly advance the shaft into the tube. Water flowing through the shaft flushes out the debris.

05 For heavier deposits, move the shaft back and forth; do not force the brush.

Finishing work

01 Stop the drive and switch off the device. Disconnect the plug from the power supply and shut off the water supply, then remove the brush from the tube.

02 Disconnect the inlet hose and shaft. Remove water from the shaft to prevent corrosion.

03 Clean the brushes and inlet filter. Dry all parts before storing them.

Maintenance

General instructions

> **WARNING**
> Disconnect the power supply and shut off the water supply before cleaning and maintenance.

Clean the housing with a soft brush or cloth, without using water. Do not use alcohol, petrol, solvents, corrosive substances or strong detergents.

Maintenance procedure

01 Remove the inlet filter from the inlet hose and clean its mesh. Remove debris from the brush end of the shaft and the ventilation openings.

02 Check the shaft and its sheath for wear, cuts and leaks. Replace a worn shaft.

03 Reinstall the inlet filter and the other removed parts. Check the fastenings and the condition of the device, accessories and power cable.

04 Connect the device and check its operation, following the sequence in the ‘HOW TO USE’ section. If it does not work correctly, stop it, disconnect the power supply and shut off the water supply before inspection or correction. After making the correction, check its operation again.

Troubleshooting

Stop using the device if a fault requires repair by a service centre.

Problem	Possible cause	Solution
Device does not operate	No power supply	Check the power connection.
Device does not operate	Incorrect voltage	Check that the supply voltage matches the rated voltage.

Problem	Possible cause	Solution
Device does not operate	Ambient temperature too low	Stop work and ensure an ambient temperature of 5–40 °C.
Water leaks from under the base	Leak in the water circuit	Check the inlet hose and connectors; tighten any loose connections.
Water leaks from under the base	Leaking seal where the shaft enters the device	Check where the shaft enters the device. Have it repaired by the service centre - submit a service request at wipcool.pl/serwis.
Device runs briefly or stops	Earth fault	Stop work, disconnect the power supply and have the installation and device inspected by qualified personnel.
Device runs briefly or stops	Overheating	Wait for the device to cool down, then restart it.
Motor runs, but the shaft or brush does not rotate	Damaged drive coupling	Have it repaired by the service centre - submit a service request at wipcool.pl/serwis.
Motor runs, but the shaft or brush does not rotate	Broken shaft	Have it repaired by the service centre - submit a service request at wipcool.pl/serwis.
No or low water flow through the shaft	Water supply shut off	Turn on the water supply.
No or low water flow through the shaft	Restricted hose	Check the inlet hose and remove any kinks or blockages.
No or low water flow through the shaft	Blocked inlet filter	Disconnect the inlet hose and clean the inlet filter mesh.
No or low water flow through the shaft	Ambient temperature too low	Ensure an ambient temperature of 5–40 °C.
No or low water flow through the shaft	Damaged self-priming pump	Have it repaired by the service centre - submit a service request at wipcool.pl/serwis.
Leaks at connections	Damaged seal	Check the seal and replace it if damaged.
Leaks at connections	Loose connection	Check and tighten the connection.

Problem	Possible cause	Solution
Noisy operation	Air being drawn in	Check the water level in the tank, that the end of the inlet hose is submerged, and the condition of the hose.
Noisy operation	Damaged internal parts	Have it repaired by the service centre - submit a service request at wipcool.pl/serwis.
Foot switch does not start or stop the drive	Faulty foot switch	Stop using the device. Have it repaired by the service centre - submit a service request at wipcool.pl/serwis.

Waste electrical and electronic equipment

01



The crossed-out bin symbol means that the device must not be disposed of with other waste at the end of its life.

Under the applicable regulations on waste electrical and electronic equipment, products marked with the separate collection symbol must not be disposed of with other municipal waste. Because they contain hazardous substances, electronic products that are not separately sorted may pose a risk to the environment and human health. Proper separate collection of waste electrical and electronic equipment prevents adverse effects on the environment.

By taking waste equipment to a collection point, the user contributes to its reuse, recycling and recovery.

Recycling - one method of protecting the environment. The process of recovering substances from waste for reuse as raw materials.

Waste recovery - the use of waste that has lost its useful value as secondary raw materials, for example plastics, paper and cardboard; the term is also commonly used to refer to waste destruction.

Information on the collection system for waste electrical and electronic equipment

- Waste electrical and electronic equipment must not be disposed of with other waste.
- The collection of incomplete electrical and electronic equipment and parts from waste equipment is prohibited.

- A distributor delivering equipment intended for households to a purchaser must collect waste equipment from households free of charge at the place of delivery, provided that the waste equipment is of the same type and performs the same function as the equipment delivered.
- The user may hand over waste equipment to a waste equipment collector, a treatment facility or a municipal waste collector in the municipality.
- Information on collection points is available on the Public Information Bulletin (BIP) websites of regional, city and municipal offices.

Service and documents

Before submitting a service request, prepare:

- Model - found on the device's data plate and on the invoice.
- Serial number - if absent, provide the production number (e.g. 11/2025), usually found on the underside of the device.
- Proof of purchase - an invoice or receipt from an authorised distributor.
- Description of the fault - what is happening, since when and under what conditions.

You can submit a service request at wipcool.pl/serwis. You will also find the warranty terms there.

WIPCOOL®
TWÓJ KLUCZ DO KOMFORTU

SERVICE AND DOCUMENTS

CT370 · Operating manual

EDITION DETAILS

Model	**CT370**
Edition	**05.11.2026 · EN**
Manufacturer	**Zhejiang Wipcool Refrigeration Equipment Co., Ltd.**
Authorised representative	**4REF sp. z o.o., ul. gen. Władysława Andersa 38, 15-113 Białystok**

wipcool.eu

- online manual and other languages
- data sheet and declaration of conformity
- service and requests

CE

The CE marking confirms the declared conformity with EU requirements.
Crossed-out bin: do not dispose of used equipment with household waste.