WIPCOOL®
TWÓJ KLUCZ DO KOMFORTU

OPERATING MANUAL · ENGLISH

P12

Condensate Pump

Read this manual before use. Keep it with the unit for its entire service life.



Read the manual
Safety and connection rules before the first start-up.

Service and warranty
Service requests and warranty terms at wipcool.eu.

Documents online
Manual, data sheet and declaration of conformity at wipcool.eu.

CONTENTS

How to use this manual

Find the chapter you need. The numbers on the right are the pages of this booklet.

01	Wipcool P12 user manual	3
02	General information	3
03	Symbols and conventions	3
04	Safety information	4
05	Technical specifications	5
06	Device diagram	7
07	Contents	8
08	Transport and storage	8
09	Application	9
10	Installation	9
11	Connection	11
12	Use	12
13	Maintenance	13
14	Troubleshooting	13
15	Waste electrical and electronic equipment	14
16	Service and documents	15

MEANING OF SYMBOLS



Separate collection of WEEE

Do not dispose of used equipment with household waste.



CE marking

Manufacturer's declaration of conformity with EU requirements.



Read the manual

Safety and operating rules before starting work.

Wipcool P12 user manual

The Wipcool P12 Condensate Pump is designed to remove condensate from air conditioners. It consists of a separate tank with a level sensor and a pump body.

The user manual is an integral part of the product. Please read this manual carefully and follow all instructions strictly.

General information

Wipcool products are designed for professional use by qualified air conditioning and refrigeration technicians. As the manufacturer, Wipcool stipulates that our equipment should only be operated by suitably qualified and trained personnel.

- Comply with all local safety regulations and general safety standards when using the Wipcool P12 Condensate Pump.
- The user manual should be kept near the device so that personnel can easily access it at any time.
- Before use, qualified personnel should read the user manual carefully and understand all the instructions it contains.
- The manufacturer accepts no liability for any damage resulting from improper use, failure to follow the user manual, lack of personnel qualifications or any unauthorised modifications to the device.
- The general terms of sale contained in the sales documents apply.

Symbols and conventions

Symbols and markings used on the device and in the manual:

01



Warning - read the text in the box next to the symbol.

02



Dangerous voltage - risk of electric shock.

03



Notice - risk of damage to the device or incorrect operation.

04



Before starting work, read all safety and installation instructions carefully.

05



Indicates that the product meets the health, safety and environmental standards applicable in the European Union.

06 **RoHS** The product meets the requirements for restricting the use of hazardous substances.

07



Do not dispose of the pump with household waste.

Safety information

WARNING
Disconnect the power supply to the pump and the air conditioner before installation, maintenance or servicing.

- Do not install a damaged pump.
- The pump is not waterproof. Do not install it outdoors or where it may be flooded.
- Do not place electrical equipment or valuable items beneath the pump. A power failure or leak may cause damage.
- Coil any excess power and alarm cable so that it is not damaged during installation.
- Secure all water hose connections with cable ties. Avoid unnecessary hose connections using couplings.

- Remove any chemical residue from the evaporator fins before restarting the air conditioner.

CAUTION
The condensate inflow must not exceed the pump capacity. Excessive inflow causes continuous operation and may damage the motor, while a sudden large inflow may cause overflow.

Technical specifications

Parameter	Value
Maximum flow rate	12 l/h
Max. suction lift	2 m
Max. pump head	7 m
Power supply	230 V~ / 50 Hz
Tank capacity	30 ml
Maximum air conditioner cooling capacity	approximately 8.8 kW
Noise level at 1 m	19 dB(A)
Operating ambient temperature	5–50 °C
Storage temperature	5–50 °C
Alarm contacts	COM / NC
Suction and discharge hoses	6 × 9 mm (internal diameter × external diameter)
Weight	0.63 kg
Pump body dimensions	154 × 34 × 30 mm
Tank dimensions	85.5 × 33.3 × 39.5 mm

Performance

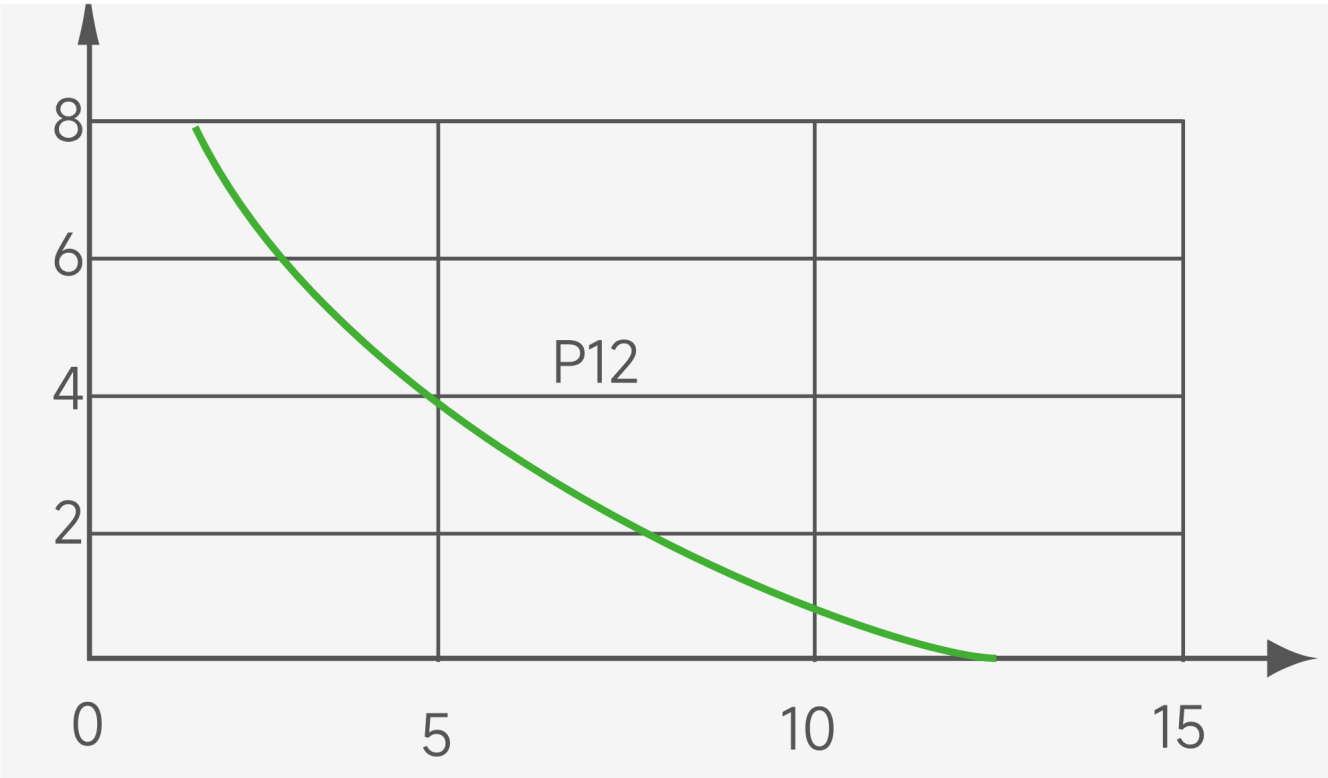

Figure 1. P12 performance curve: maximum flow rate 12 l/h, max. head 7 m. Vertical axis: head [m]; horizontal axis: flow rate [l/h].

Device diagram

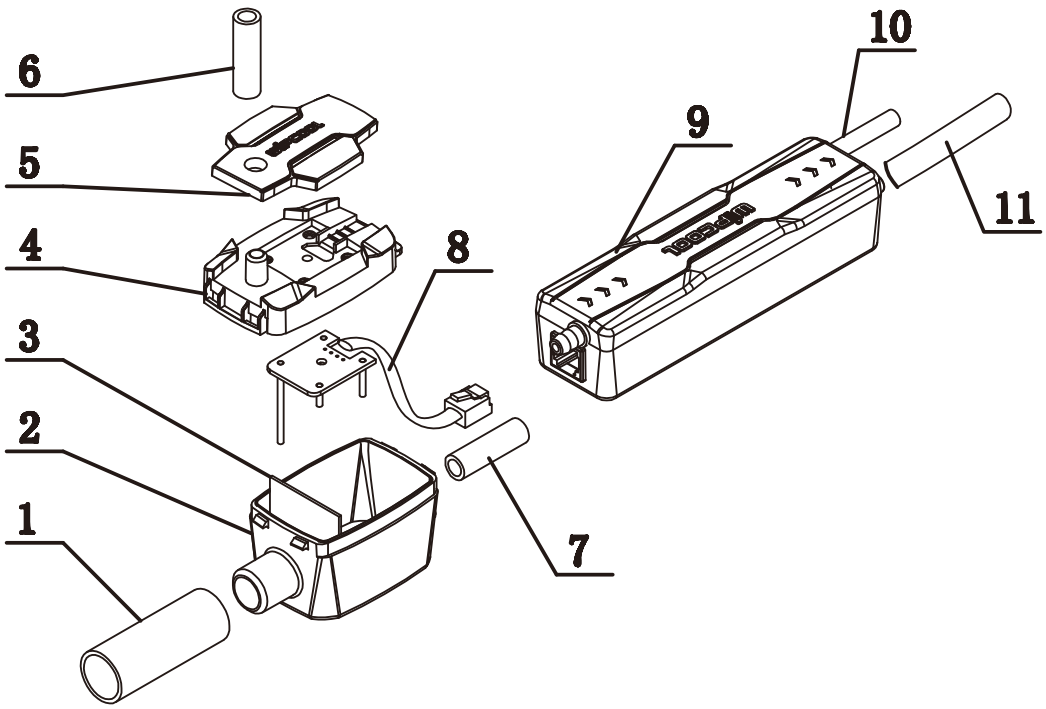

Figure 2. P12 pump components.

No.	Name
1	Inlet hose
2	Tank
3	Filter
4	Tank lid
5	Lid cover
6	Vent tube (6 mm diameter)
7	Suction hose
8	Level sensor signal cable
9	Pump body
10	Power and alarm cable
11	Discharge hose

Pump dimensions

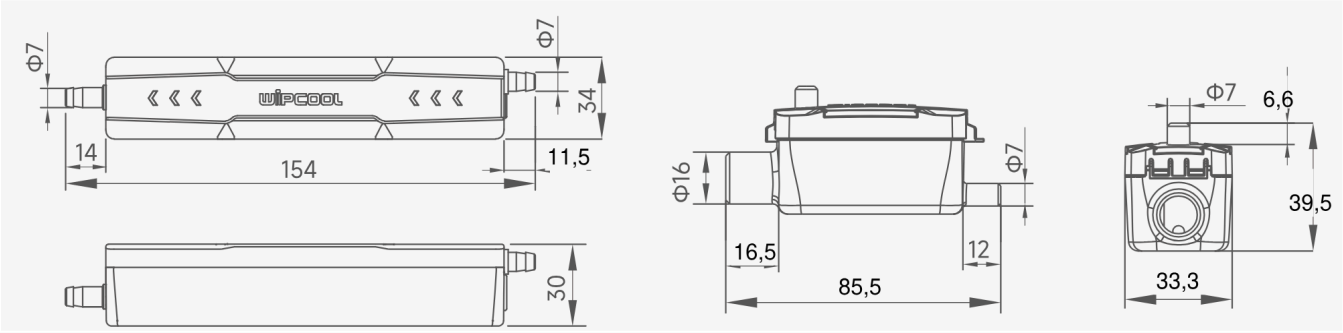

Figure 3. Pump body and tank dimensions [mm].

Contents

After unpacking, check that the kit is complete and in good condition. Report any missing or damaged items to the seller.

- Pump body with tank, filter, inlet hose, vent tube, suction hose and level sensor signal cable.
- Cable ties: 4 pcs, 30 cm long and 2 pcs, 10 cm long.
- 6 mm couplings: 2 pcs.
- Adhesive mounting pads for the pump body and tank: 2 pcs.
- 25 × 16 mm rubber reducer.
- 16 mm rubber elbow connector.
- Power and alarm cable.

The 6 × 9 mm discharge hose is not included in the kit.

Transport and storage

Transport

- Transport the pump in its original packaging. Do not throw it, and protect it from shocks and excessive vibration.
- Protect the device from moisture, dust and extreme temperatures. Secure the packaging against movement during transport.

Storage

Store the pump horizontally in a dry, well-ventilated place at 5–50 °C, away from direct sunlight and heat sources.

Application

The pump is designed to remove condensate from split system, ducted and cassette air conditioners.

Installation

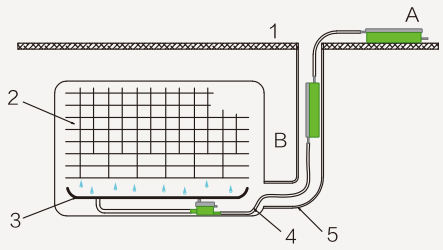

01 **Step 1**

Choose a mounting location for the pump body: behind the indoor unit, in trunking or above the ceiling. The pump body can be mounted horizontally (A) or vertically (B). The tank must always be positioned horizontally. Figure 4. Pump body: A - horizontal, B - vertical. 1 - ceiling; 2 - evaporator; 3 - condensate tray; 4 - tank; 5 - suction hose.

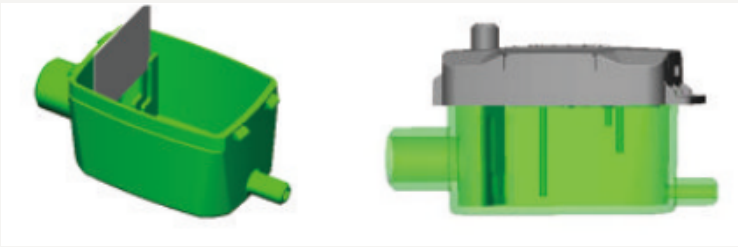

02 **Step 2**

Check that the level sensor is on the right-hand side of the filter. Fit the filter and tank lid. Figure 5. Fitting the filter and tank lid.

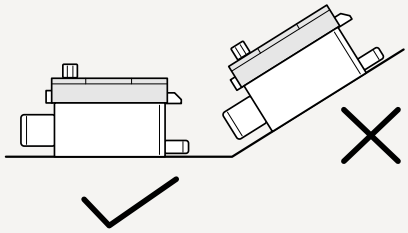

03 **Step 3**

Position the tank horizontally and connect the inlet hose to the air conditioner condensate drain, ensuring a watertight seal. Figure 6. Horizontal positioning of the tank.



04 **Step 4**

Connect the vent tube to the tank vent opening. Figure 7. Connecting the vent tube.

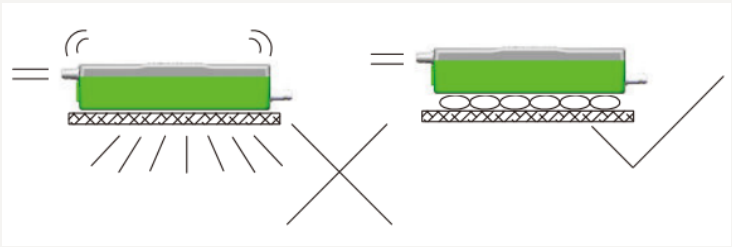

05 **Step 5**

Secure the pump body in the selected position and the tank horizontally. Use vibration-damping material to ensure quiet pump operation. Figure 8. Mounting with vibration damping.

06 **Step 6**

Check the flow direction indicated by the arrows on the pump body.

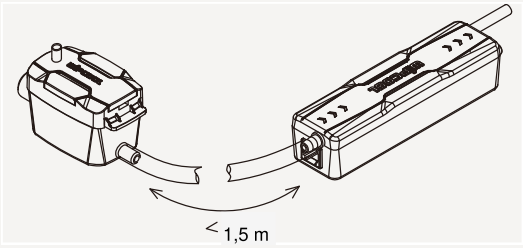

07 **Step 7**

Connect the tank to the pump body using the 6 × 9 mm silicone suction hose and secure it with cable ties. The suction hose must be shorter than 1.5 m. Figure 9. Connecting the tank to the pump body.

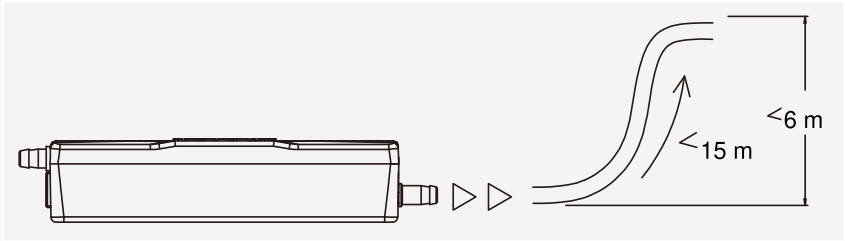

08 **Step 8**

Connect the 6 × 9 mm discharge hose to the pump body outlet and secure it with a cable tie. The max. pump head is 7 m, but the installed head must be less than 6 m. The discharge hose must be less than 15 m long. Figure 10. Discharge hose: length less than 15 m, head less than 6 m.

Connection

WARNING

Disconnect the power supply before making connections.

CAUTION

Do not confuse the power supply conductors with the alarm contact conductors - incorrect connection will damage the pump. Check that the voltage matches the rating plate. Distinguish the power and alarm cable from the level sensor signal cable.

The pump requires an independent, permanent power supply. After the air conditioner stops, leave the pump power supply switched on so that it can pump out the remaining condensate.

Marking	Function	Conductor colour
L	Live conductor	Brown

Marking	Function	Conductor colour
N	Neutral conductor	Blue
NC	Normally closed contact	Black
COM	Common contact	Black

Connect the COM and NC alarm contacts to the circuit that stops the air conditioner when the condensate level is high. If the air conditioner has a liquid level control input, connect the COM and NC contacts to it. If it has no such input, the air conditioner power supply can be controlled through a contactor, or another alarm device can be connected. The connection must comply with the documentation for the air conditioner concerned.

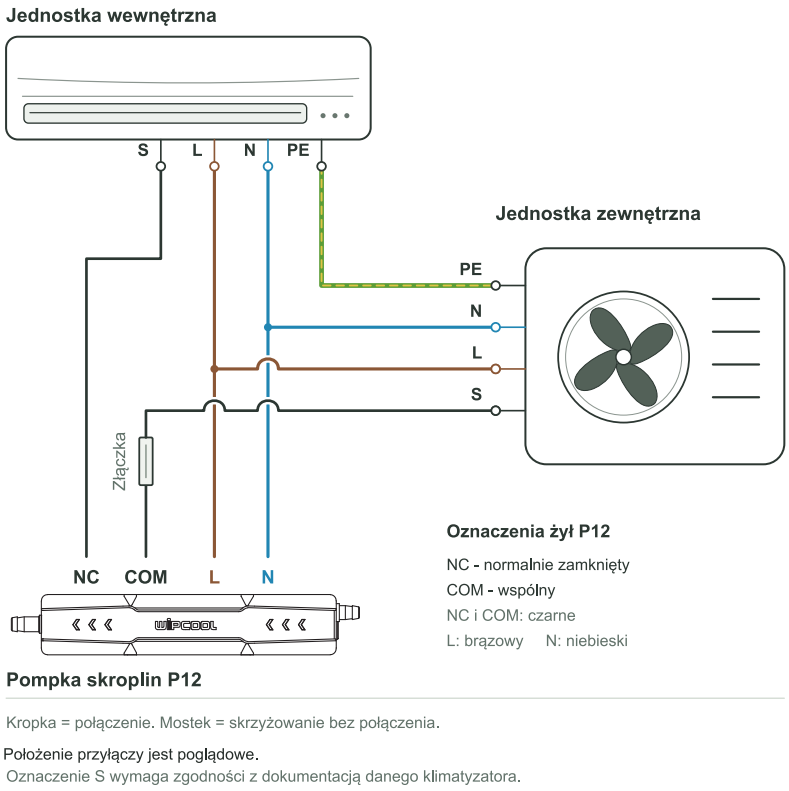

Figure 11. Example connection of the COM and NC contacts to the S signal wire between the indoor and outdoor units.

Use

Operational test

01 After completing installation and electrical connection, switch on the pump power supply.

02 Pour water into the condensate tray. Check the tray and connections for leaks and check that the pump removes the water.

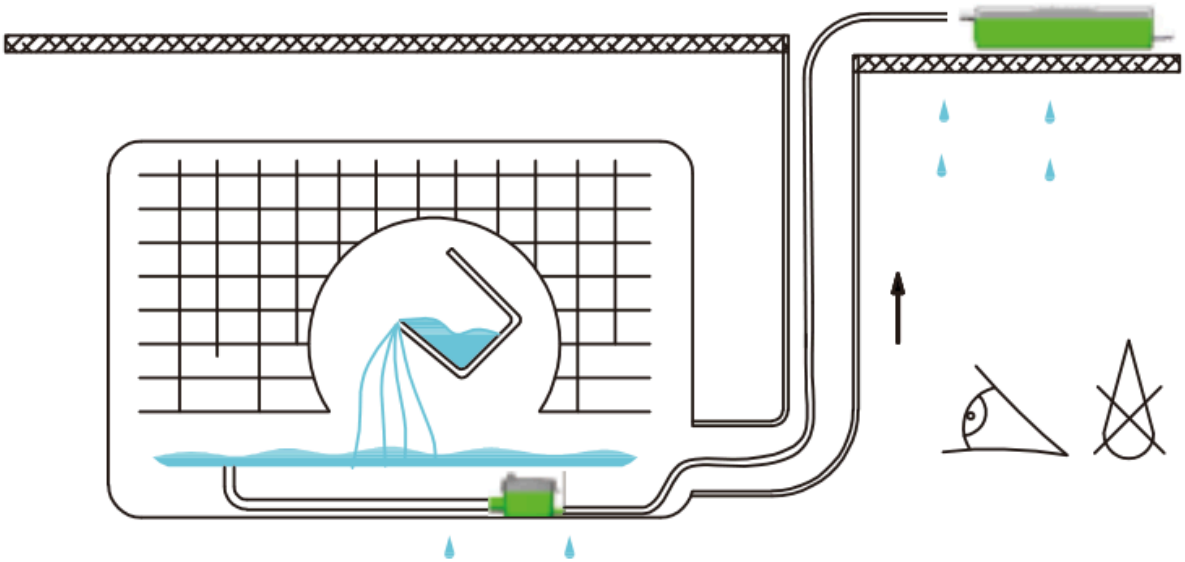

Figure 12. Water test after installation.

Maintenance

WARNING
Disconnect the power supply to the pump and the air conditioner before inspection and cleaning.

Check and clean the pump before the cooling season. Remove deposits from inside the tank and from the surface of the level sensor. Check that the inlet and outlet are clear.

Troubleshooting

WARNING
Disconnect the power supply to the pump and the air conditioner before checking connections, disconnecting cables or hoses, and cleaning.

Problem	Possible cause	Solution
Pump runs continuously	Tank is tilted	Level the tank.
Pump runs continuously	Deposits in the tank or on the level sensor	Clean the inside of the tank and the surface of the level sensor.
Pump does not run	No power supply	Check the power supply connection.

Problem	Possible cause	Solution
Pump does not run	Incorrect voltage	Check that the supply voltage meets the pump requirements.
Pump does not run	Incorrect wiring	Check the connections of the L and N power supply conductors.
Pump does not run	Tank is tilted	Level the tank and check the water level.
Pump runs but does not remove water	Blocked inlet or outlet	Check and clean the inlet and outlet.
Pump runs but does not remove water	Incorrect tank position	Position the tank horizontally.
Water leaks	Damaged discharge hose	Check the discharge hose and replace it if damaged.
Water leaks	Incorrect discharge hose connection	Check the discharge hose connection and secure it.
Pump gurgles or makes noise after switching off	The end of the discharge hose is lower than the pump, causing a siphoning effect	Route the hose so that its end is higher than the pump.
Noisy pump operation	Damage to internal components	Arrange for repair by the service team - submit a request at wipcool.pl/serwis.
Pump switches on and off too frequently	Incorrect tank position	Check the operation of the level sensor and level the tank.
Alarm activates	Condensate level too high	Check that the pump inlet is not blocked and that condensate is draining properly.
Alarm activates	Incorrect alarm connection	Check the connections of the COM and NC alarm contact conductors.

Waste electrical and electronic equipment

01



The crossed-out bin symbol means that the device must not be disposed of with other waste at the end of its life.

Under the applicable regulations on waste electrical and electronic equipment, products marked with the separate collection symbol must not be disposed of with other municipal waste. Because they contain harmful substances, electronic products that are not sorted separately may be hazardous to the environment and human health. Proper separate collection of waste electrical and electronic equipment prevents adverse effects on the environment.

By taking waste equipment to a collection point, the user contributes to its reuse, recycling and recovery.

Recycling - a method of protecting the environment. The process of recovering substances from waste that can be reused as raw materials.

Waste recovery - the use (also commonly understood as destruction) of waste that has lost its useful value, such as plastics, paper and cardboard, as secondary raw materials.

Information on the waste electrical and electronic equipment collection system

- Waste electrical and electronic equipment must not be disposed of with other waste.
- The collection of incomplete electrical and electronic equipment and parts from waste equipment is prohibited.
- A distributor delivering equipment intended for households to a purchaser is obliged to collect waste equipment from households free of charge at the place of delivery, provided that the waste equipment is of the same type and performs the same function as the equipment delivered.
- The user may hand over waste equipment to a waste equipment collector, a treatment facility or a municipal waste collector in the municipality.
- Information on collection points is available on the BIP websites of regional marshal offices and city and municipal offices.

Service and documents

Before submitting a request, prepare:

- Model - shown on the device rating plate and on the invoice.
- Serial number - if there is none, provide the production number (e.g. 11/2025), usually found on the underside of the device.
- Proof of purchase - an invoice or receipt from an authorised distributor.
- Description of the fault - what is happening, when it started and under what conditions.

Submit a service request at wipcool.pl/serwis. You will also find the warranty terms there.

WIPCOOL®
TWÓJ KLUCZ DO KOMFORTU

SERVICE AND DOCUMENTS

P12 · Operating manual

EDITION DETAILS

Model	**P12**
Edition	**05.11.2026 · EN**
Manufacturer	**Zhejiang Wipcool Refrigeration Equipment Co., Ltd.**
Authorised representative	**4REF sp. z o.o., ul. gen. Władysława Andersa 38, 15-113 Białystok**

wipcool.eu

- online manual and other languages
- data sheet and declaration of conformity
- service and requests

CE

The CE marking confirms the declared conformity with EU requirements.
Crossed-out bin: do not dispose of used equipment with household waste.